Timing In Latches

Delays in latches are very similar to those we talked about in flip flops. The only difference here is that there no “active edge”, there is “active level”. Consider the active-high latch shown below:

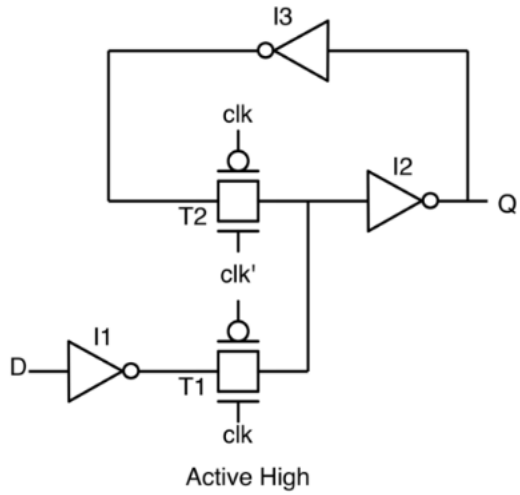

The delays are shown below:

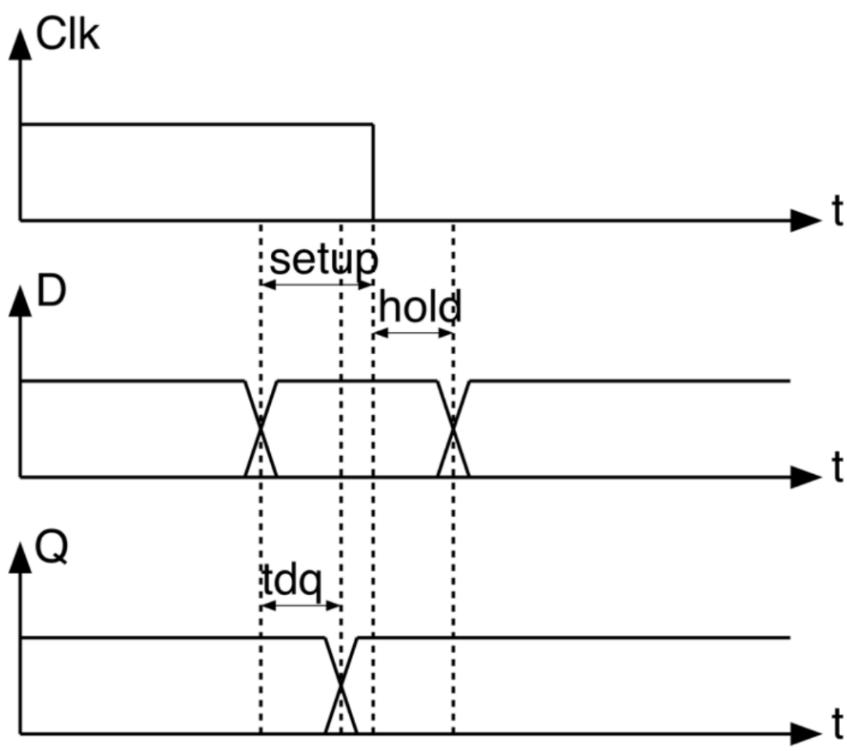

1) t_{su}: has exactly the same formula and meaning as was in registers, you can revise it from last year. The only difference here is that it is the time before the “inactive level”, not the “active edge”, during which the input data must be stable.

$$t_{su} = t_{I1} + t_{T1} + t_{I2} + t_{I3}$$

2) t_h:

$$t_h = t_{0-0\ overlap} - t_{I1} - t_{T1}$$

3) t_{dq}: since the output is allowed to change during a whole level, not just at edges as in registers, so there is t_{dq} not t_{cq}:

$$t_{dq} = t_{I1} + t_{T1} + t_{I2}$$

As we know, we usually call circuits built using registers as “pipelines”. To differentiate, we will call the circuits built using latches as “latch loops”. So, the circuit shown below is a latch loop:

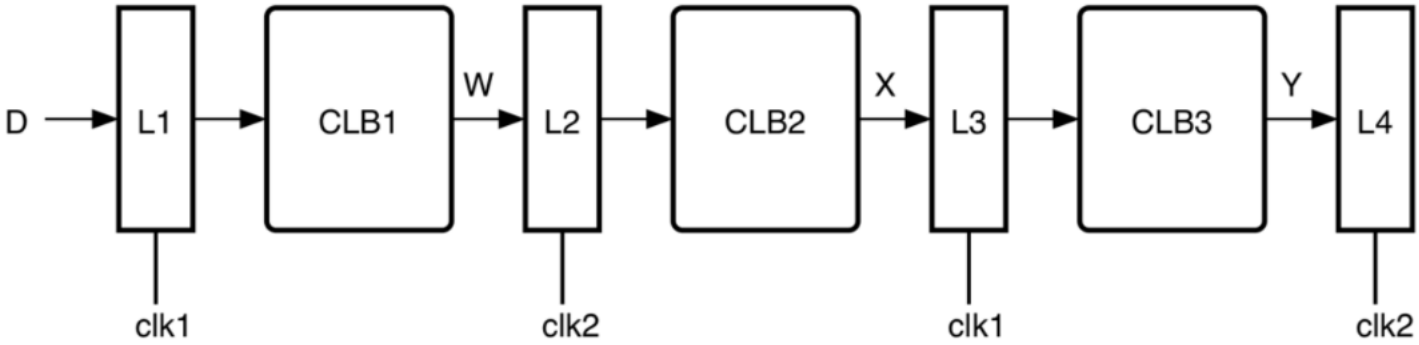

Notice that $clk1$ and $clk2$ are nothing but inverted versions of each other (i.e. $clk1 = clk2'$). We could have also used the same clock across all latches, but in this case we should have used alternating positive and negative latches. For example:

$L1 \rightarrow$ positive latch

$L2 \rightarrow$ negative latch

$L3 \rightarrow$ positive latch

$L4 \rightarrow$ negative latch

Slack Borrowing

Consider the loop shown below:

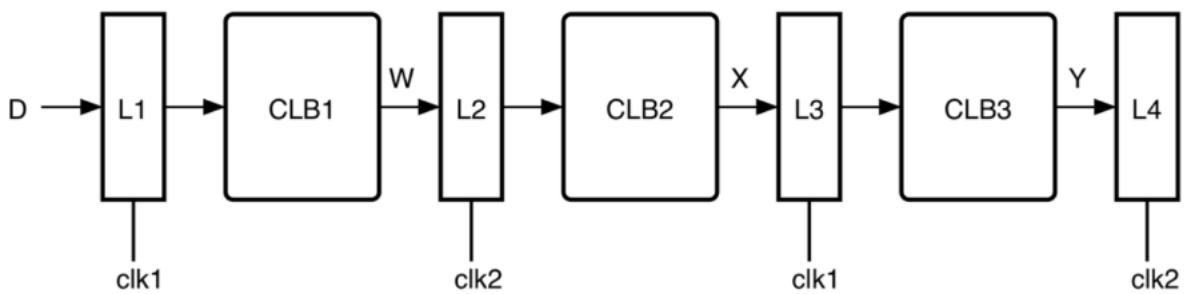

Delwa2ty clk1 is as shown below. Fel awel kanet be zero w bel taly el latch $L1$ kan el output beta3o sabet mesh beyetghayar. Geh el positive edge bta3 clk1 w bel taly $L1$ b2a transparent w bel taly el output beta3o momken yebda2 yetghayar. El output da haya5od wa2t 2ad eh 3o2bal ma yewsal 3and latch $L2$? $t_{dq1} + t_{CLB1,max}$. Tyb el $t_{dq1} + t_{CLB1,max}$ ma7soba men awel feen? 5aly balak en fel flip flops kona dayman bene7seb el wa2t da men 3and el positive edge bta3 el clk la2en de el la7za el wa7eda el l data kanet allowed tetghayar fiha. However, hena el data is allowed to change over the whole level of the clock, fa el $t_{dq1} + t_{CLB1,max}$ momken tet7eseb men ay la7za athna2 el high phase bta3 clk1. For now, assume we will calculate it from the positive edge of clk1.

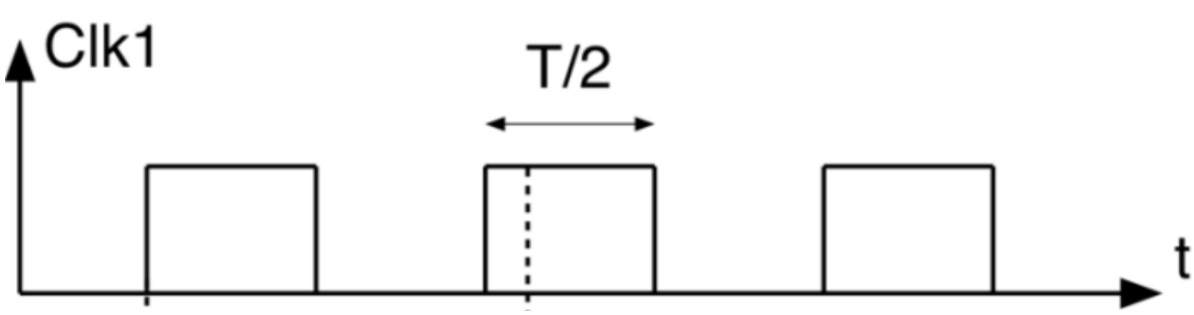

Tyb el wa2t el howa $t_{dq1} + t_{CLB1,max}$ da masm7olo yeb2a 2ad eh? in other words, el data el hato5rog men $L1$ masmo7laha maximum tewsal emta 3and el input bta3 $L2$?

Walahy bema en clk1 w clk2 are as shown below, fa momken n2ool en el data el mafrood tewsal 3an $L2$ abl el positive level bta3 clk2 (el howa at the red arrow) 3ashan sa3et-ha hayeb2a $L2$ b2a transparent.

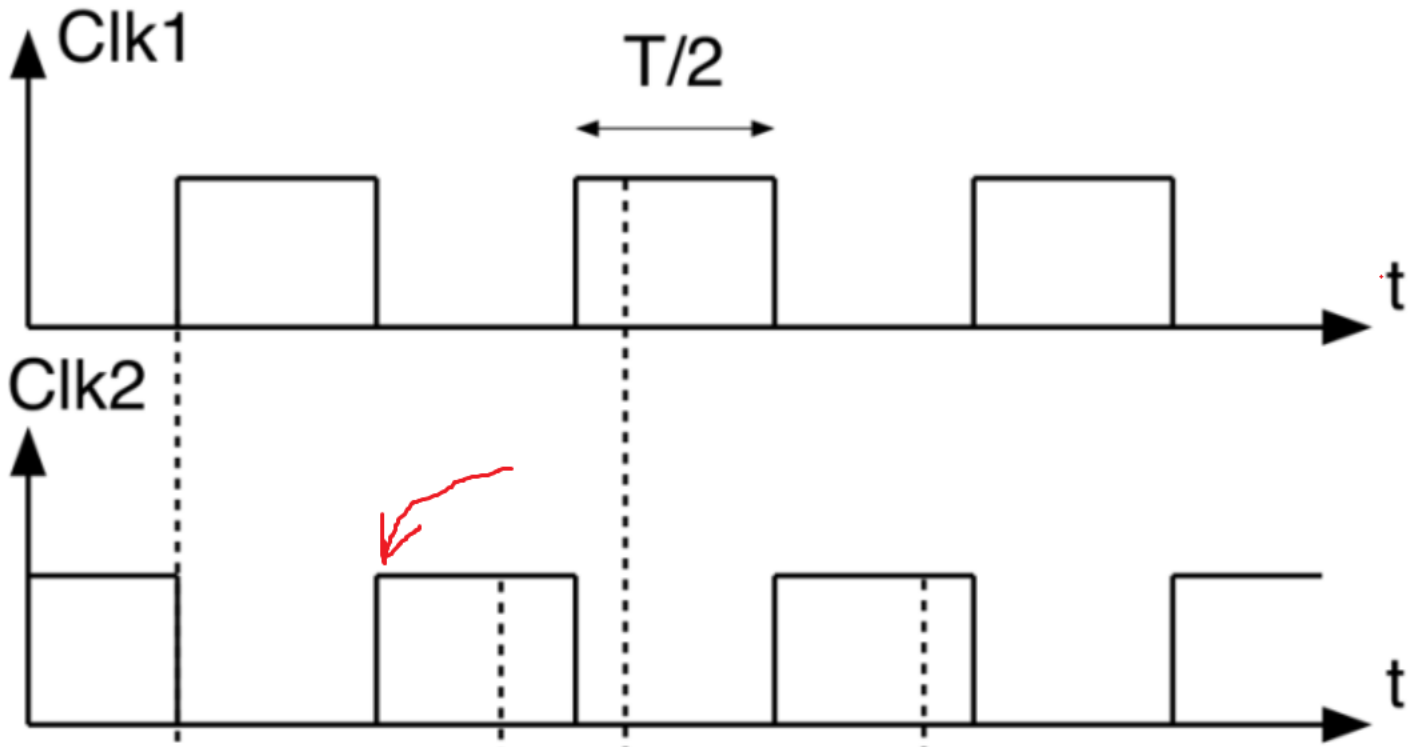

Thus, we can say:

$$t_{dq1} + t_{CLB1,max} \leq \frac{T_{clk}}{2}$$

Tyb hal el condition da lw mat7a2a2sh haye7sal 7aga ghalat aw haey7sal violation? la2 wala haye7sal 7aga ghalat wala haye7sal violation, leeh? mesh haye7sal 7aga ghalat la2en lw el data badal ma tewsal 3and el red arrow weslet b3deh be shwaya, fa still $L2$ transparent w bel taly hay take in el data de 3ady. W mesh haye7sal violation la2en el violations bete7sal abl el inactive level bta3 el latch, el howa y3ny 3and el negative edge bta3 clk2, w da lesa odam ana b3eed 3ano. W bel taly nazareyan el data el 5arga men $L1$ is allowed enaha tewsal 3and $L2$ 5elal $T_{clk} - t_{su2}$, el howa el time shown below:

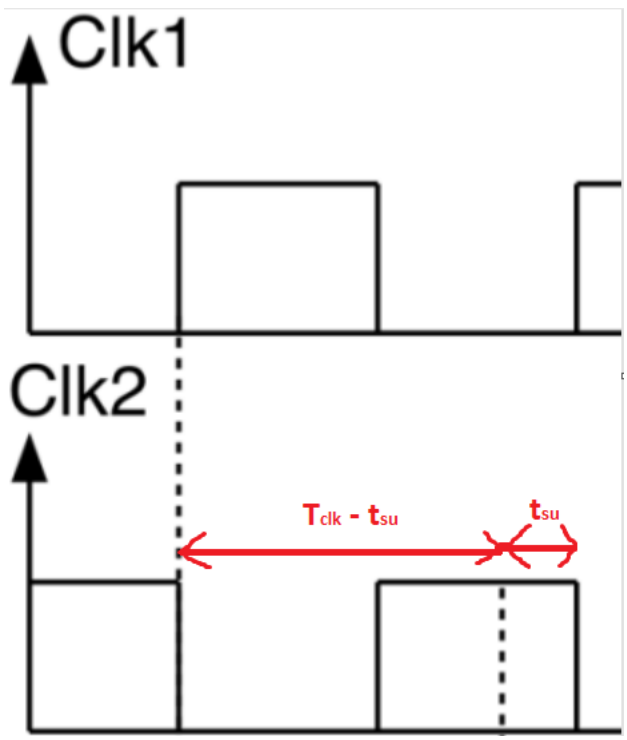

Thus, the condition becomes:

$$t_{dq1} + t_{CLB1,max} \leq T_{clk} - t_{su2}$$

Fa fel awel kan $L1$ masmo7lo be wa2t $\frac{T_{clk}}{2}$ 3ashan yewasal el data bta3to 3and $L2$, delwa2ty enta edeto baraa7 aktar w ba2a masmo7lo l7d $T_{clk} - t_{su2}$. However, mafeesh 7aga be balash keda, akeed 5eserna 7aga. El 7aga de heya enak geet 3la 7esab $L2$, zana2to fel wa2t y3ny. Leeh? lw olna en L_1 maltazamsh eno yewasal el data bta3to abl $\frac{T_{clk}}{2}$ w 5ad wa2t aktar shwaya as shown below:

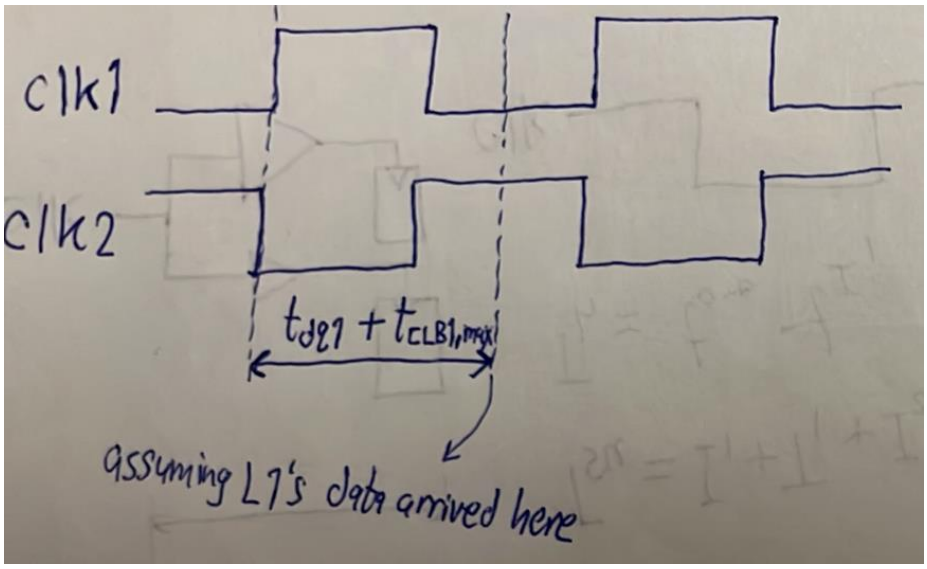

fa keda $L1$ 5ad men wa2t $L2$ 2ad eh? $t_{dq1} + t_{CLB1,max} - \frac{T_{clk}}{2}$. El wa2t el $L1$ 5ado da is called ***slack borrowing***, $L1$ estalaf shwayet wa2t men $L2$, wel wa2t da is shown below:

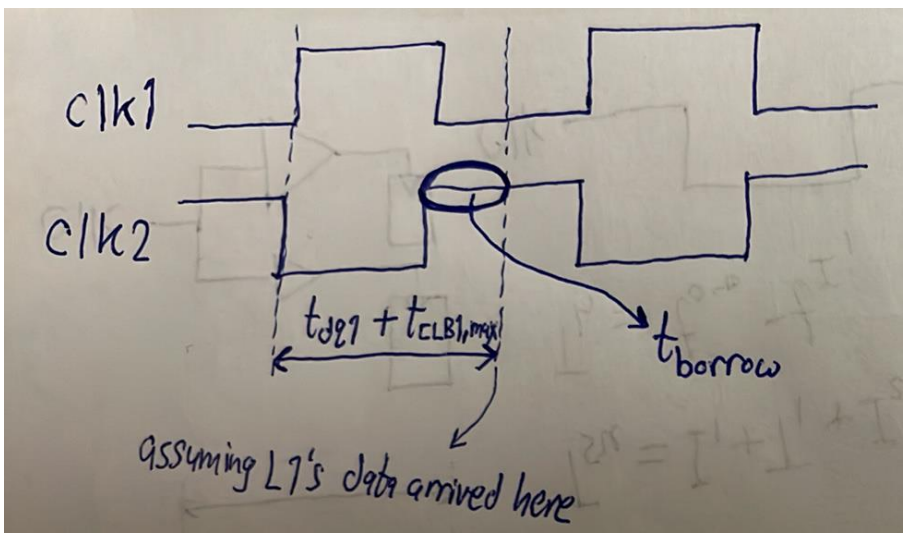

Figure 1

Tyb $L1$ a5ro ye borrow 2ad eh men $L2$ such that eno maye3melsh moshkela? In other words, $t_{dq1} + t_{CLB1,max}$ de te2dar te get extended 2ad eh such that enaha mate3melsh moshkela?

$$t_{borrow_1} \leq \frac{T_{clk}}{2} - t_{su2}$$

Yeb2a keda el maximum time that $L1$ can borrow from $L2$ without causing a setup violation in $L2$ is $\frac{T_{clk}}{2} - t_{su}$.

Tab negy b2a le $L2$. Eh el maximum time that $L2$ can borrow from $L3$? bardo:

$$t_{borrow_2} \leq \frac{T_{clk}}{2} - t_{su3}$$

Ah bs el kalam da kan hayeb2a sa7 lw $L2$ kan bade2 bera7to, laken $L1$ 3amal borrowing meno, w bel taly el amount of borrowing el ba2et available le $L2$ ba2et a2al. Fa delwa2ty lazem n2ool:

$$t_{borrow_2} \leq \frac{T_{clk}}{2} - t_{su3} - t_{borrow_1}$$

$$t_{borrow_1} + t_{borrow_2} \leq \frac{T_{clk}}{2} - t_{su}$$

Nafs el kalam ma3 $L3$ and so on with the rest of the loop. Yeb2a keda netla3 be conclusion mohem awy w howa en 3ashan el latch loop de teshtaghal sa7 w maye7salsh fiha ay violations, hatroo7 3la awel latch w tet2aked en:

$$t_{borrow_1} \leq \frac{T_{clk}}{2} - t_{su}$$

where:

$$t_{borrow_1} = t_{dq1} + t_{CLB1,max} - \frac{T_{clk}}{2}$$

then troo7 3la tany latch w tet2aked en:

$$t_{borrow_1} + t_{borrow_2} \leq \frac{T_{clk}}{2} - t_{su}$$

where:

$$t_{borrow_2} = t_{dq2} + t_{CLB2,max} - \frac{T_{clk}}{2}$$

then troo7 3la talet latch w tet2aked en:

$$t_{borrow_1} + t_{borrow_2} + t_{borrow_3} \leq \frac{T_{clk}}{2} - t_{su}$$

where:

$$t_{borrow_3} = t_{dq3} + t_{CLB3,max} - \frac{T_{clk}}{2}$$

and so on with all the latches in your design. Fa 5aly balak enak mesh betroo7 3and a5er stage w te7seb el total borrowed time 3andaha, la2 enta betroo7 3and kol stage w te7seb. Lw kol el conditions el fatet de met7a2a2a, yeb2a keda mafeesh moshkela fel design bta3ak. Lw ay wa7ed menhom was violated, the **whole** loop should be redesigned.

Lw stage 5alaset abl el wa2t beta3ha (i.e. $\frac{T}{2}$), bensamy el wa2t el ba2y slack. Yeb2a keda lw 5alaset badry yeb2a esmo slack, lw 5alaset met2a5ar yeb2a esmo borrow (i.e. $t_{borrow} = -t_{slack}$), as shown below:

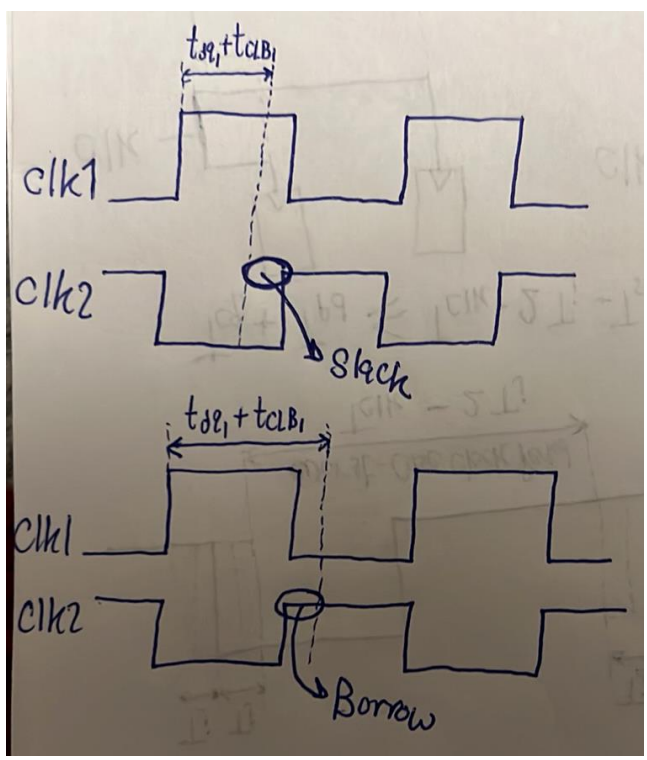

Conclusion:

For a correct operation of a latch loop, for each stage j:

1. Calculate $t_{borrow_j} = t_{dq_j} + t_{CLB_j} - \frac{T_{clk}}{2}$.
2. Verify that $\sum_{i=1}^{j} t_{borrow_i} \leq \frac{T_{clk}}{2} - t_{su}$

So, this shows that latches are more flexible than flip flops because a latch can have a negative slack (i.e. borrow) but the circuit can still work and no violations occur. This was not the case in flip flops, whenever a negative slack occurs, it means a complete failure of the circuit.

So, why don't we use latches in our design?

1. Data has only $\frac{T_{clk}}{2}$ to propagate from one latch to another, while flip flops allows data to propagate in $T_{clk} - t_{su}$.
2. Being level triggered, latches are vulnerable to glitches.
3. Place and route tools find it harder to achieve timing closure in latch-based designs. Watch this from 5:20 to the end.